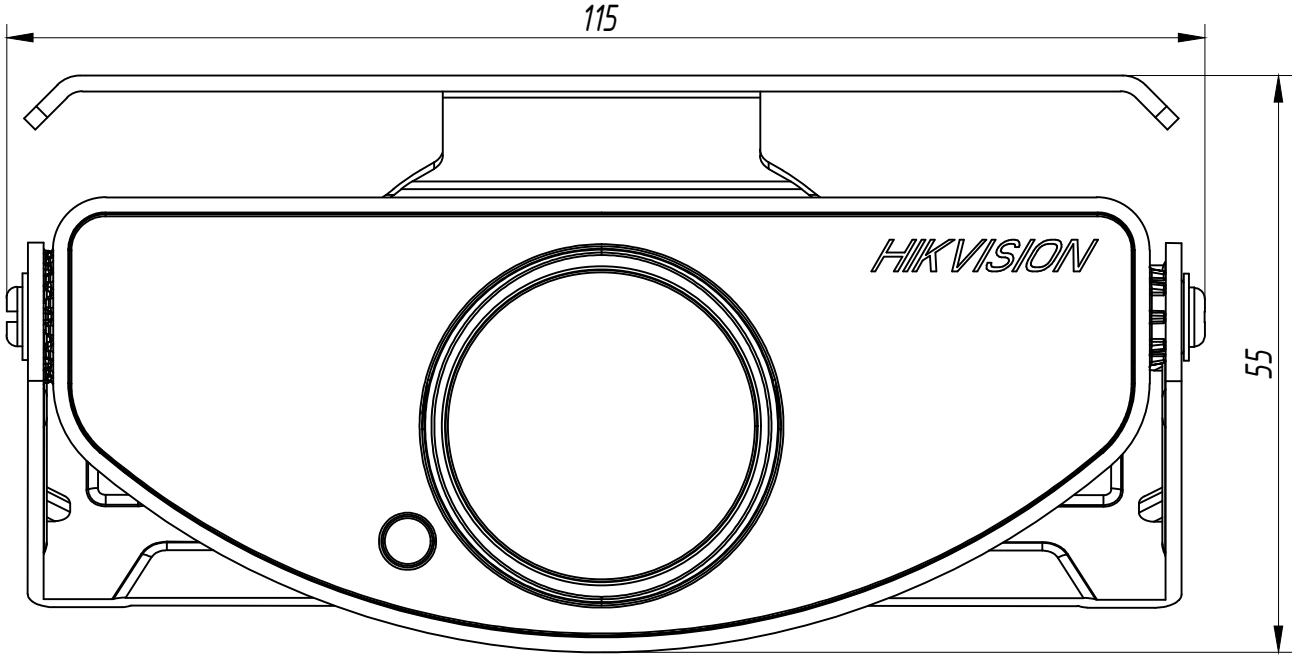
115
55
HIKVISION

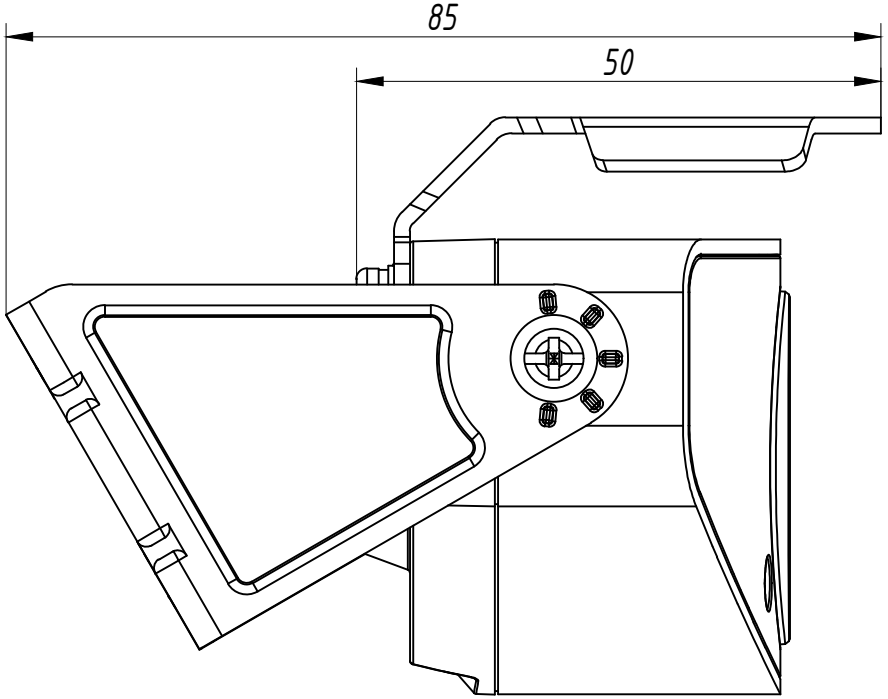
85
50